Specification Data
Panasonic Ventilation Fan

Panasonic

WhisperValue VENTILATION FAN

ENERGY STAR

FV-10VS1 (100 CFM)

Description
Ventilating fan shall be Low Noise ceiling mount type rated for continuous run. Fan shall be ENERGY STAR rated and certified by the Home Ventilation Institute (HVI). Evaluated by Underwriters Laboratories and conform to both UL and cUL safety standards.

Motor/Blower:
- Four-pole totally enclosed condenser motor rated for continuous run.
- Power Rating shall be 120 volts and 60 Hz.
- Fan shall be UL and cUL listed for tub/shower enclosure when used with a GFCI branch circuit wiring.
- Motor equipped with thermal-cutoff fuse.
- Removable with permanently lubricated plug-in motor.

Housing:
- Rust proof paint, galvanized steel body.
- 4" round compatible, oval duct.
- Built in backdraft damper.
- Double hanger bar system allowing for ideal positioning.

Grille:
- Attractive design using PP material.
- Attaches directly to housing with torsion springs.

Warranty:
- The factory warranty shall be a minimum of 3 years limited warranty on parts.

Typical Specifications:
Ventilating fan and light shall be of the ceiling or wall mount, ENERGY STAR rated type, with no less than 100 CFM and no more than 1.5 sones as certified by the Home Ventilating Institute (HVI) at 0.1 static pressure in inches water gauge. Fan power consumption shall be no greater than 36.4 watts and ENERGY STAR rated with efficiency rating of no less than 2.9 CFM/watt. The motor shall be totally enclosed, four pole condenser type engineered to run continuously. Power rating shall be 120v/60Hz. Oval duct diameter shall be no less than 4-5/8" and 4" round duct compatible. Fan shall be UL and cUL listed for wall installation and tub/shower enclosure when used with GFCI branch circuit wiring. Fan shall be California Title-24 compliant.

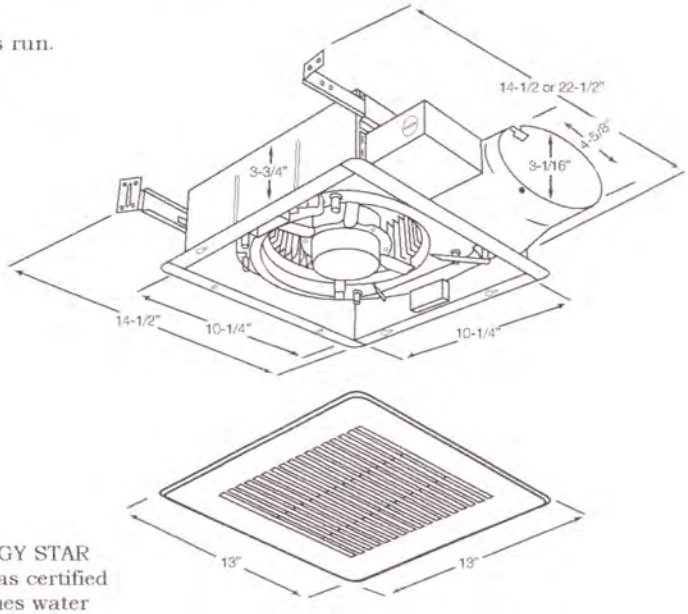

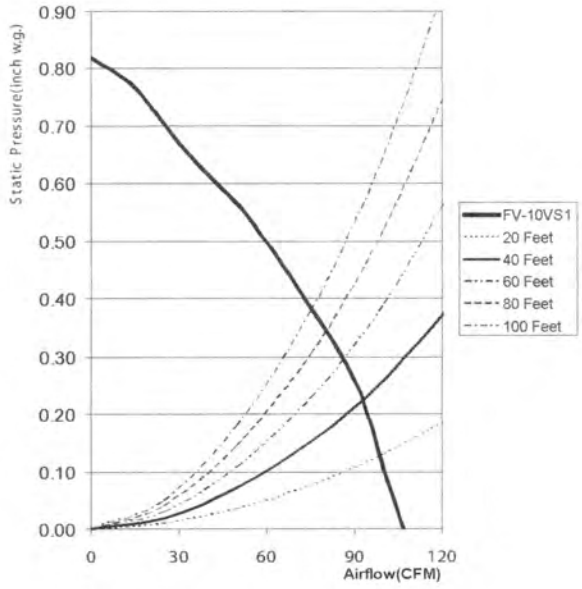

Specifications:

FV-10VS1		4" Duct (Oval)	
Ventilation Fan Characteristics (HVI Certified Data)	Static Pressure (inches w.g.)	0.1	0.25
	Air Volume (CFM)	100	90
	Noise (sones)	1.5	NA
	Power Consumption (Watts)	36.4	36.1
	Energy Efficiency (CFM/Watts)	2.9	2.7
	Speed (RPM)	840	979
	Current (amps)	0.30	0.30
	Power Rating (V/Hz)	120/60	
	California Title-24 Compliant	Yes	

As of 07/09

c UL us

2109 HVI CERTIFIED

For Complete Installation Instructions Visit www.panasonic.com/building

Model	Quantity	Comments	Project:
			Location:
			Architect:
			Engineer:
			Contractor:
			Submitted by:
			Date:

Panasonic

Ventilating Fan

INSTALLATION INSTRUCTIONS

Model No.

FV-13VKM3 FV-13VKS3 FV-13VK3
FV-08VKM3 FV-08VKS3 FV-08VK3
FV-05VK3

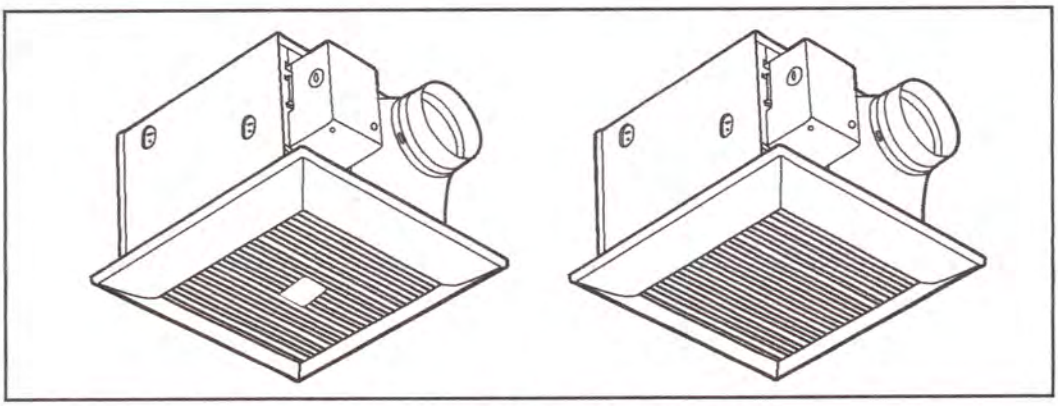

READ AND SAVE THESE INSTRUCTIONS

Thank you very much for having purchased our Ventilating Fan. Please read these instructions carefully before attempting to install, operate or service the Panasonic Ventilating Fan. Failure to comply with instructions could result in personal injury and/or property damage. Please retain this booklet for future reference

Table of Contents

Please Read Prior To Installing This Fan 2
Unpacking 3
Supplied Accessories 3
Description 3
General Safety Information 4
Dimensions 5
Wiring Diagram 5
Switch Indication 6
Operation 6
Installation I (Joist Mounting - I) 7-9
Installation II (Suspension Brackets Mounting) 10
Installation III (Joist Mounting - II) 11
Maintenance (Cleaning) 11
Practical Guide To Installation ..... Backcover
Specifications ..... Backcover
Product Service ..... Backcover

PDF created with pdfFactory Pro trial version www.pdffactory.com

PLEASE READ PRIOR TO INSTALLING THIS FAN

[For models of: FV-13VKM3, FV-08VKM3, FV-13VKS3, FV-08VKS3.]

The WhisperGreen line of ventilating fans employs state of the art technology providing a number of unique features that lead to improved indoor air quality. These features need to be fully understood prior to installation to full realize the benefits fans offer.

Spot and Continuous Ventilation: These fans are designed to run continuously ensuring a healthy environment at low CFM levels 24 hours a day. By utilizing **CustomVent Variable Speed Control** the fans are built to run continuously at a pre-set lower level (FV-13VKM3 and FV-13VKS3:0,50,70,90, 110 CFM ; FV-08VKM3 and FV-08VKS3:0,30,40,50,60,70 CFM). The setting is dependent on the size of the room and the individual wishes of the homeowner. **It is crucial that the installer pre-set the lower setting during the installation. Please refer to the chart below and page 5 of the installation instructions.**

CustomVent Variable Speed Control (Lower Setting).
ASHRAE 62.2-2007

(sq.feet)	Two Bedrooms	Three Bedrooms	Four Bedrooms	Five Bedrooms
< 1, 000	33	40	48	55
1,500	38	45	53	60
2,000	43	50	58	65
2,500	48	55	63	70
3,000	53	60	68	75
3,500	58	65	73	80
4,000	63	70	78	85
4,500	68	75	83	90
5,000	73	80	88	95
5,500	78	85	93	100
6,000	83	90	98	105
6,500	88	95	103	110
7,000	93	100	108	-

These fans are also built to take care of the homeowner's spot ventilation needs when the room is occupied. This models kick-up to a maximum level of 130 CFM for the FV-13VKM3 and FV-13VKS3 and 80CFM for the FV-08VKM3 and FV-08VKS3 either when the switch is turned on (available with FV-13VKS3 and FV-08VKS3) or activated by the **SmartAction Motion Sensor** (available with FV-13VKM3 and FV-08VKM3).

A High / Low Delay Timer, located inside the fan unit, is utilized to return the fan back to the pre-set Continuous ventilation mode. **The installer needs to consult with the homeowner for the desired setting on the timer (0.5 - 60 minutes) and make the adjustments during the installation.**

Optimum Ventilation Performance: Generally duct length, elbows and other factors increase static pressure hindering the performance of most ventilation fans. This fan utilize **SmartFlow** microchip technology that monitors the static pressure in the system and speeds up or slows down the rpm of the fan depending on the amount of resistance. This allows the fan to perform as rated, whether facing 0.1,0.2 or even 0.25 inches water gauge. The bottom line is that it makes for easier installation. The installer no longer has to worry about compromising the fan's performance.

Outstanding Energy Savings: These fans are the very first to be built using DC motor technology. The new DC motor is 30% - 70% more energy efficient than the minimum ENERGY STAR requirements.

PDF created with pdfFactory Pro trial version www.pdffactory.com

UNPACKING

Unpack and carefully remove the unit from carton.
Refer to the Supplied Accessories list to verify that all parts are present.

SUPPLIED ACCESSORIES

Part name	Appearance	Quantity
Grille	For models of: FV-13VKM3 FV-08VKM3	1
	For models of: FV-13VKS3 FV-08VKS3 FV-13VK3 FV-08VK3 FV-05VK3	
Suspension bracket I		1
Suspension bracket II		1
Suspension bracket III		1
Suspension bracket IV		1

Part name	Appearance	Quantity
Screw I (ST4.2X6)		2
Screw II (ST4.2X14)		1
Long screw (ST4.2X20)		6
Installation instructions		2
Warranty sheet		1

DESCRIPTION

These Panasonic ventilating fan models are listed by UL under UL file No. E78414.
These Panasonic ventilating fan models use a sirocco fan driven by a DC motor powered by an integral transformer. The motor is designed to have long operating life, high dynamic response, higher speed ranges with saving energy. The grille covering the fan body is a spring-loaded, quick remove type.
A damper for preventing air counter flow is provided.
The blower uses a high-capacity sirocco fan developed to reduce the noise level.
Panasonic ventilating fan models FV-13VKM3 and FV-08VKM3 are equipped with a motion sensor that shifts the fan to high flow automatically when motion is detected. It is user-adjustable to operate 0.5~60 minutes after motion is no longer detected.

PDF created with pdfFactory Pro trial version www.pdffactory.com

GENERAL SAFETY INFORMATION

1. Do not install this ventilating fan where interior room temperature may exceed 104°F (40°C).
2. Make sure that the electric service supply voltage is AC 120V, 60Hz.
3. Follow all local electrical and safety codes, as well as the National Electrical Code (NEC) and the Occupation Safety and Health Act (OSHA).
4. Always disconnect the power source before working on or near the fan, motor, light fixture or junction box.
5. Protect the power cord from sharp edges, oil, grease, hot surfaces, chemicals or other objects.
6. Do not kink the power cord.
7. Do not install the unit where ducts are configured as shown in Fig. A.
8. Provide make up air for proper ventilation.

Fig. A

CAUTION:
1. For general ventilating use only. Do not use to exhaust hazardous or explosive materials and vapors.
2. Not for use in cooking area. (Fig.B)
3. This product must be properly grounded.

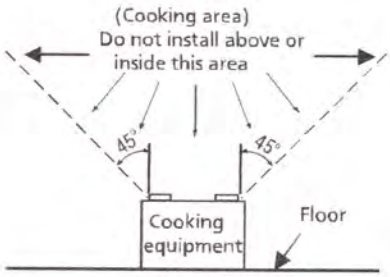

Fig. B

WARNING:
To reduce the risk of fire, electric shock or injury to persons, observe the following:
1. Use this unit only in the manner intended by the manufacturer. If you have any questions, contact to the manufacturer.
2. Before servicing or cleaning unit, switch power off at service panel and lock the service disconnecting means to prevent power from being switched on accidentally. When the service disconnecting means cannot be locked, securely fasten a prominent warning device, such as a tag, to the service panel.
3. Installation work and electrical wiring must be done by qualified person(s) in accordance with all applicable codes and standards, including fire-rated construction.
4. Sufficient air is needed for proper combustion and exhausting of gases through the flue (chimney) of fuel burning equipment to prevent back drafting. Follow the heating equipment manufacturer's guideline and safety standards such as those published by the National Fire Protection Association (NFPA), and the American Society of Heating, Refrigeration, and Air Conditioning Engineers (ASHRAE) and the local code authorities.
5. When cutting or drilling into wall or ceiling, do not damage electrical wiring and other hidden utilities.
6. Ducted fans must always be vented to the outdoors.
7. If this unit is to be installed over a tub or shower, it must be marked as appropriate for the application and be connected to a GFCI (Ground Fault Circuit Interrupter)-protected branch circuit.
8. These models are UL listed for tub and shower enclosures.
9. Not to be installed in a ceiling thermally insulated to a value greater than R40.(This is required for installation in Canada only)
10. Do not use this fan with any solid-state speed control device. Solid state controls may cause harmonic distortion which can cause motor humming noise.
11. A statement to the effect that when the product is to no longer be used, it must not be left in place but removed, to prevent it from possibly falling.

PDF created with pdfFactory Pro trial version www.pdffactory.com

DIMENSIONS

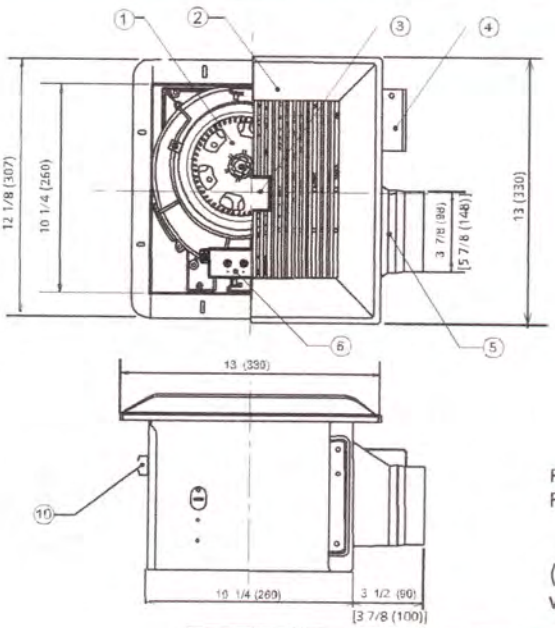

Unit: inches (mm)

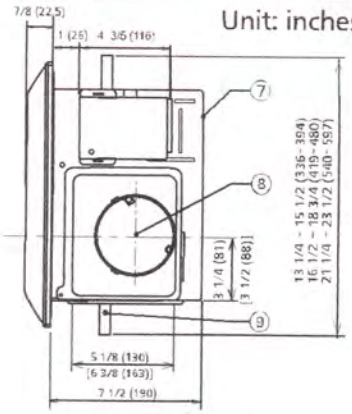

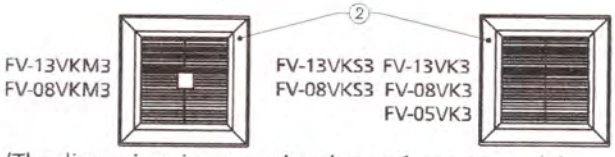

(The dimensions in square brackets refer to 13 models which are different from 08 and 05 models)

No.	Part name	No.	Part name
1	Blade	6	Switch unit (FV-13VKM3, FV-08VKM3 FV-13VKS3, FV-08VKS3 only)
2	Grille		
3	Sensor unit (FV-13VKM3,FV-08VKM3 only)	7	Fan body
		8	Damper
4	Junction box	9	Suspension bracket
5	Adaptor	10	Bracket cover

WIRING DIAGRAM

FV-13VKM3 FV-08VKM3

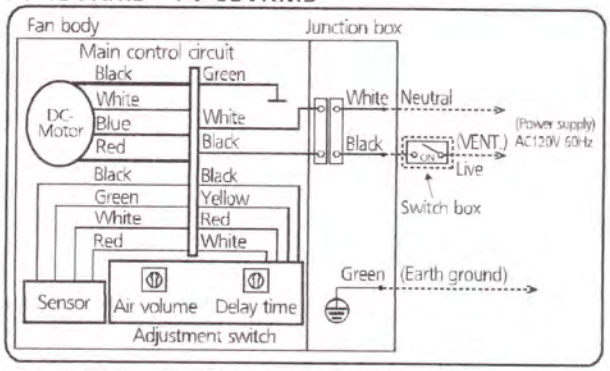

FV-13VKS3 FV-08VKS3

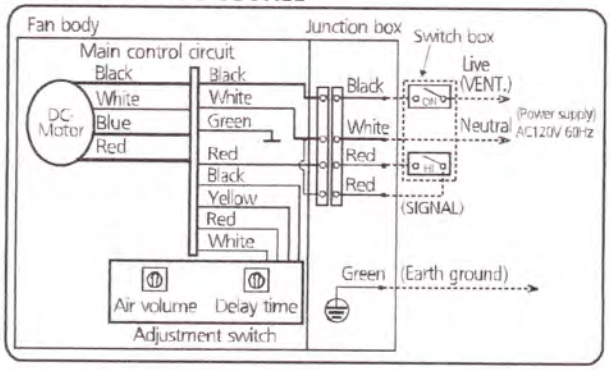

FV-13VK3 FV-08VK3 FV-05VK3

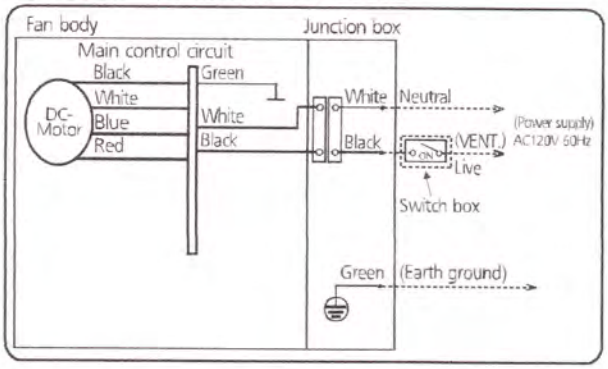

PDF created with pdfFactory Pro trial version www.pdffactory.com

SWITCH INDICATION

FV-13VKM3
FV-13VKS3

Switch indications on blower unit

FV-08VKM3
FV-08VKS3

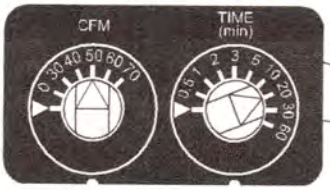

Switch indications on blower unit

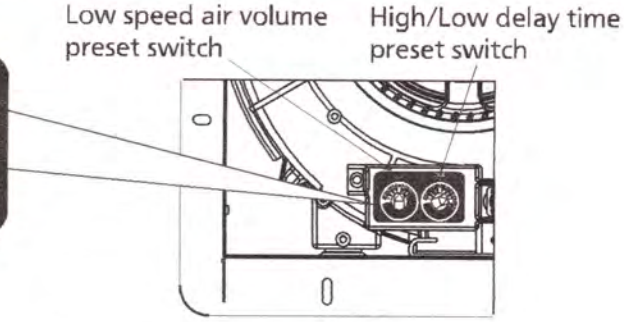

Low speed air-volume preset switch positions

FV-13VKM3 FV-13VKS3	Air volume [CFM]	0		50	70	90	110
FV-08VKM3 FV-08VKS3		0	30	40	50	60	70

Factory setting : FV-13VKM3/FV-13VKS3: 70CFM; FV-08VKM3/FV-08VKS3: 50CFM.
Position "0" : Fan stop.
Position "▶" : use for factory test only.
High/Low delay time preset switch positions

Delay Time [min]	▶	0.5	1	2	3	5	10	20	30	60

Factory setting : 20 minutes.
Position "▶" : use for factory test only.
(Models of FV-13VK3 and FV-08VK3 and FV-05VK3 have only one steady air volume.)

OPERATION

■ Sensor detectible range (For models of FV-13VKM3 and FV-08VKM3 only)

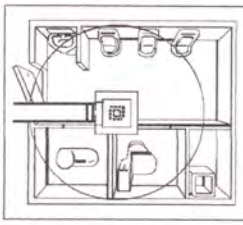

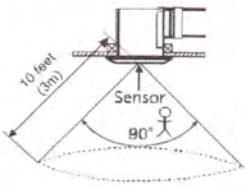

The distance that motion can be detected is limited to 10 feet (3m).
The field of view of the sensor is 90°.
(Room temperature is 25°C)

■ Motion

- The low speed is determined by air volume preset switch.
- The delay time is determined by High/Low delay time preset switch.
- The unit maintains the higher speed for an adjustable duration of 0.5 to 60 minutes, after motion is no longer detected.

FV-13VKM3 FV-08VKM3	Human active	INSIDE 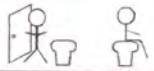 OUTSIDE		
	Fan active	At low speed	When motion is detected, fan runs at the high speed.	Remains running at high speed until the delay time has passed.

FV-13VKS3 FV-08VKS3	Human active	INSIDE OUTSIDE		
	Fan active	At low speed	When manual wall switch is closed, fan runs at the high speed.	When manual wall switch is opened, Fan remains running at high speed until the delay time has passed.

(Models of FV-13VK3 and FV-08VK3 and FV-05VK3 have only one steady air volume, when the power switch is closed, FV-13VK3 works steadily at 130CFM and FV-08VK3 works steadily at 80CFM and FV-05VK3 works at 50 CFM, when the power switch is opened, it will stop running.)

PDF created with pdfFactory Pro trial version www.pdffactory.com

INSTALLATION I (JOIST MOUNTING - I)

Joist situation:

Spacing A is 16 inches (406 mm) to 24 inches (609 mm) on center joists

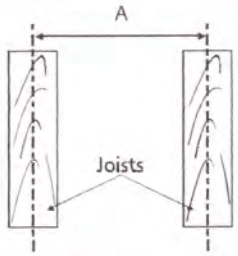

1. If the spacing A is 16 inches (406 mm) to 24 inches (609 mm) on center joists, please follow the installation step as below.

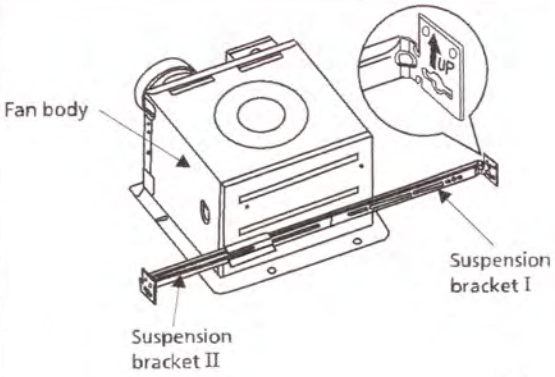

Fig.1

IMPORTANT:

Remove the tape from damper and adaptor before installation. As shown below:

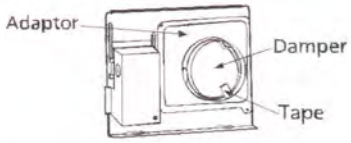

2. Insert the suspension bracket I and II into the fan body. (Select the suspension bracket connection holes as shown below) (Fig.1)

Suspension bracket connect method:

Suspension bracket I and II connect with screw I as shown below:

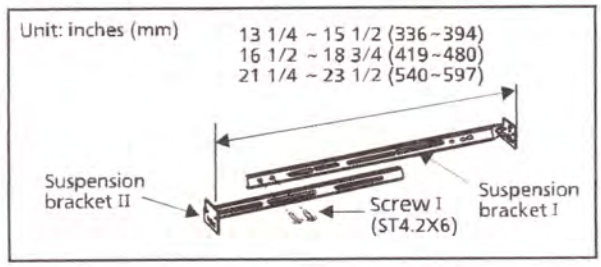

3. Install the suspension bracket and the flange of fan body to joists by using long screws (ST4.2X20) and secure it to the fan body by using screw II (ST4.2X14). (Fig.2)

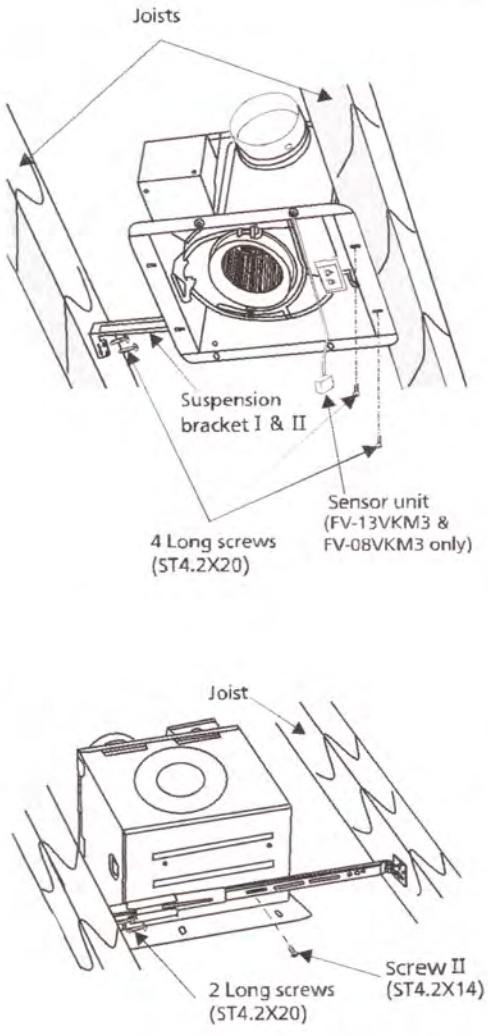

Fig.2

PDF created with pdfFactory Pro trial version www.pdffactory.com

INSTALLATION I (JOIST MOUNTING - I) CONTINUED

4. Install a circular duct and secure it with clamps or wire ties and seal it with mastic or approved duct tape. (Fig.3)

5. Remove junction box cover and secure conduit or stress relief to junction box knock-out hole. (Fig.3)

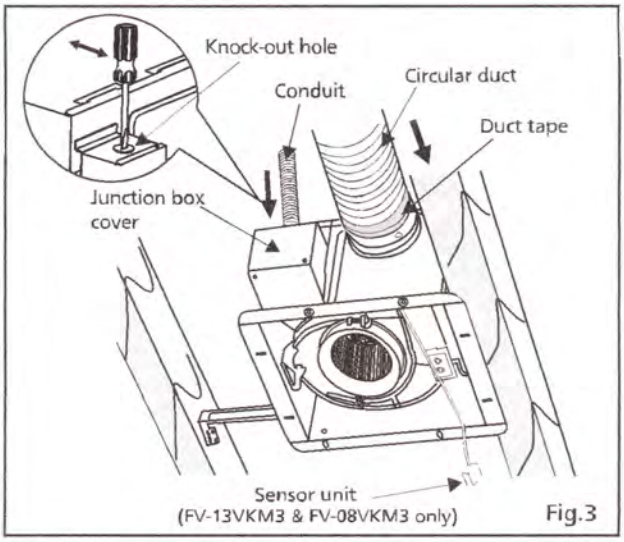

Fig.3

6. Refer to wiring diagram below.
   Follow all the local electrical safety codes as well as the National Electrical Code (NEC).
   Using UL approved wire nuts, connect house power wires to ventilating fan wires. (Fig.4-1, Fig.4-2)

CAUTION:
Mount junction box cover carefully so that lead wires are not pinched.

Note:
Wiring detail please refer to the wiring diagram on page5.

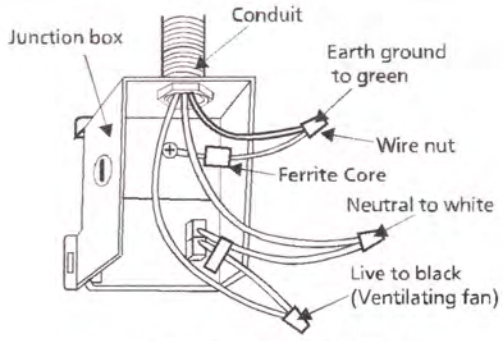

FV-13VKM3 FV-08VKM3
FV-13VK3 FV-08VK3 FV-05VK3
Fig.4-1

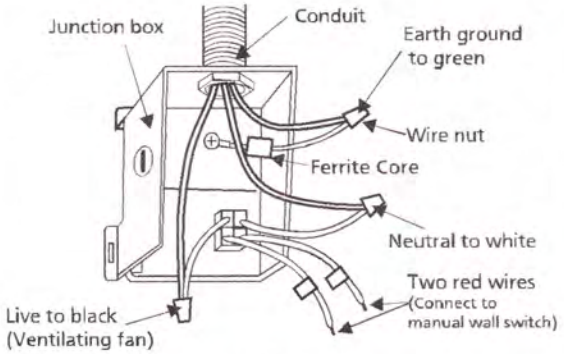

FV-13VKS3 FV-08VKS3
Fig.4-2

PDF created with pdfFactory Pro trial version www.pdffactory.com

INSTALLATION I (JOIST MOUNTING - I) CONTINUED

7. Finish ceiling work. Ceiling hole should be aligned with the inside edges of the flange. (Fig.5)

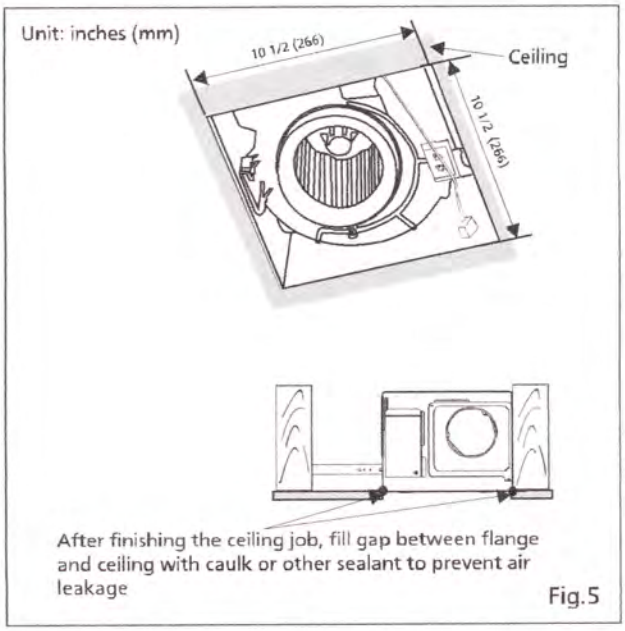

Fig.5

IMPORTANT:
Remove the tapes from louver and springs before installation. As shown below:

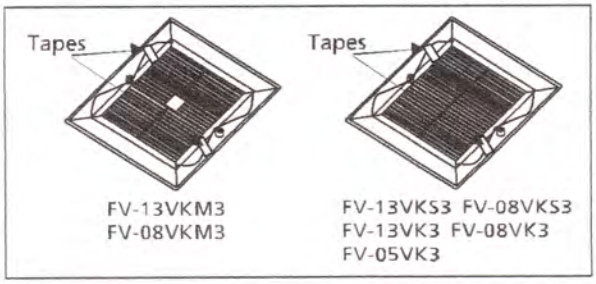

8. Insert the sensor unit into slot of the grille; Fix the lead wire of sensor unit into the clasps (3 positions). (FV-13VKM3 and FV-08VKM3). (Fig.6)

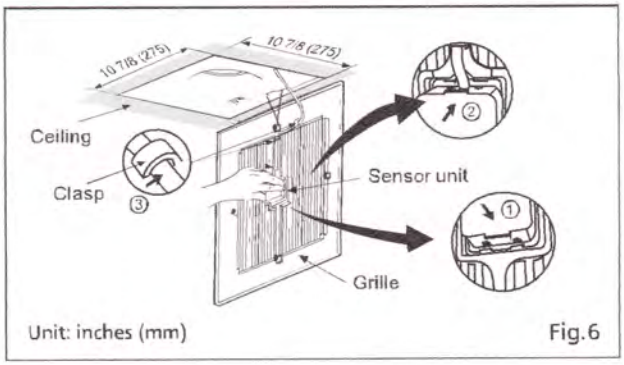

Fig.6

9. Adjust high / low delay time preset switch and low speed air volume preset switch (Fig.7). Refer to switch indication on page 6. (FV-13VKM3, FV-08VKM3, FV-13VKS3 and FV-08VKS3)

CAUTION:
Mount grille carefully so that lead wire of sensor unit is not pinched.

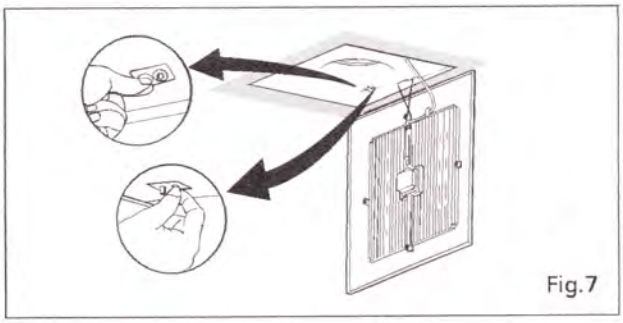
Fig.7

10. Insert the mounting springs into the slot as shown and mount grille to fan body. (Fig.8)

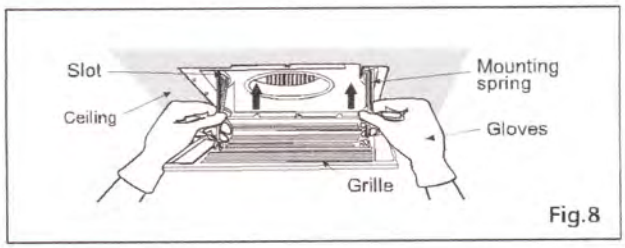

Fig.8

PDF created with pdfFactory Pro trial version www.pdffactory.com

INSTALLATION II (SUSPENSION BRACKETS MOUNTING)

Joist situation:

Spacing A is 16 inches (406 mm) to 24 inches (609 mm) on center joists

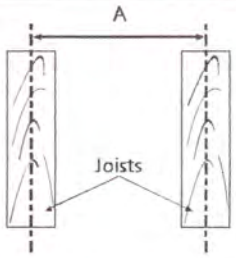

1. If the spacing A is 16 inches (406 mm) to 24 inches (609 mm) on center joists, please follow the installation step as below.

2. Insert the suspension bracket I and II into the fan body and suspension bracket III or IV into the adaptor. (Select the suspension bracket connection holes as shown below) (Fig.9, Fig.10)

Suspension bracket connect method:

Suspension bracket I and II connect with screw I as shown below:

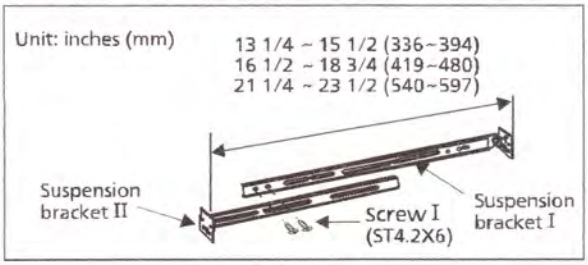

3. Install the suspension bracket to joists by using long screws (ST4.2X20) (Fig.10) and secure it to the fan body by using screw II (ST4.2X14). (Fig.11)

4. Follow steps 4 to 10 of installation I (page 8 and page 9) to complete the installation work.

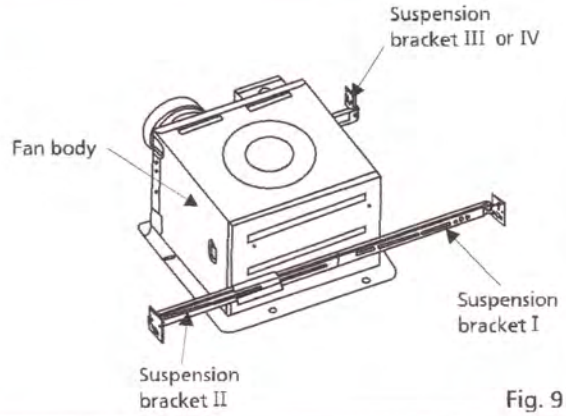

Fig. 9

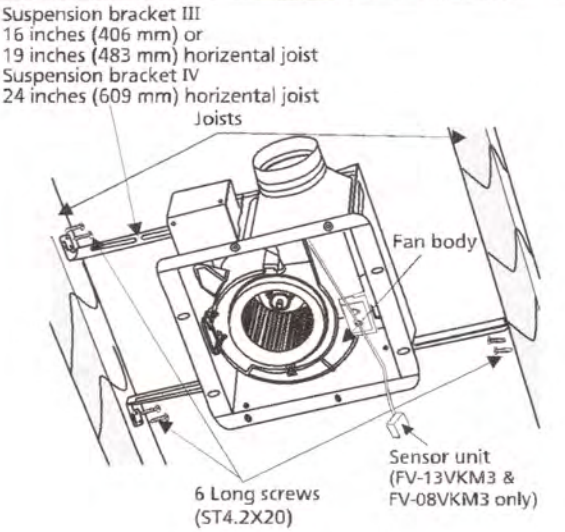

Unit: inches (mm)

Fig. 10

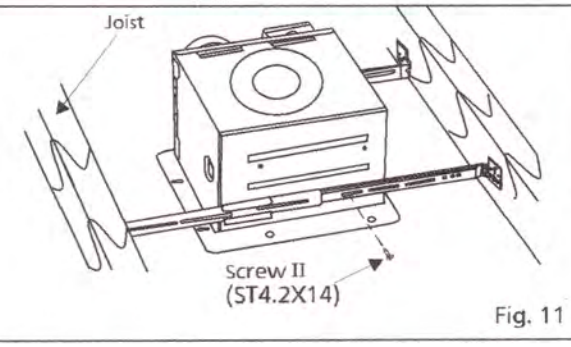

Fig. 11

PDF created with pdfFactory Pro trial version www.pdffactory.com

INSTALLATION III (JOIST MOUNTING - II)

Joist situation:

Spacing B is
10 1/2 inches (266 mm) to
11 1/2 inches (292 mm)
on joists

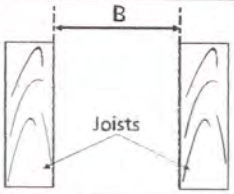

1. If the spacing B is 10 1/2 inches (266 mm) to 11 1/2 inches (292 mm) on joists, please follow the installation step as below.
2. Secure 4 long screws (ST 4.2X20) at flange of frame. (Fig.12)
3. Follow steps 4 to 10 of installation I (page 8 and page 9) to complete the installation work.

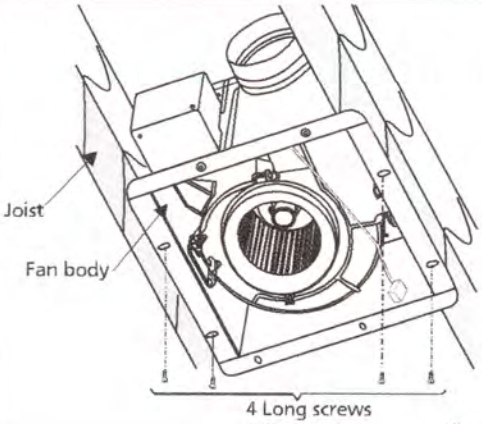

Fig.12

MAINTENANCE (CLEANING)

WARNING:
Disconnect power source before working on unit. Routine maintenance must be done every year.

CAUTION:
1. Never use gasoline, benzene, thinner or any other such chemicals for cleaning the ventilating fan.
2. Do not immerse motor in water when cleaning.
3. Do not soak resin parts in water over 140°F (60°C).

1. Remove grille pull down one mounting spring(no sensor lead passed). Remove sensor unit then pull down the other mounting spring. (Squeeze mounting spring and pull down carefully). (Fig.13, Fig.14)
2. Clean grille. (Don't put into hot water. Use non-abrasive kitchen detergent, wipe dry with clean cloth) (Fig. 15)
3. The grille should be dry after cleaning.
4. Remove dust and dirt from fan body using a vacuum cleaner. (Fig. 16)
5. Using a cloth dampened with kitchen detergent, remove any dirt from fan body. Wipe dry with clean cloth. (Fig. 17)
6. Replace grille.

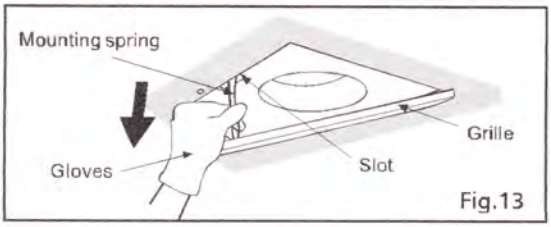

Fig.13

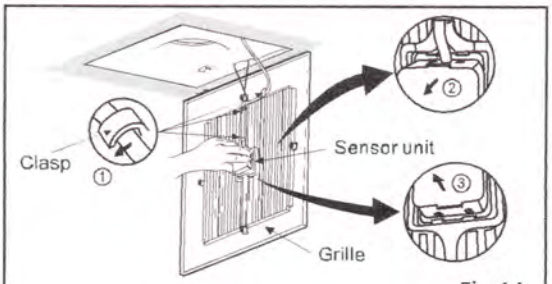

Fig.14

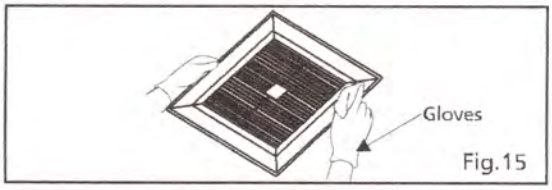

Fig.15

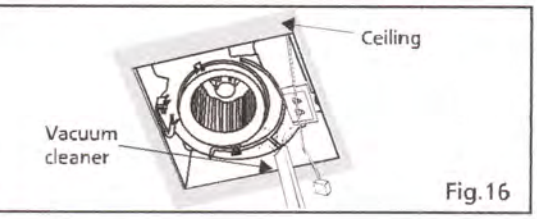

Fig.16

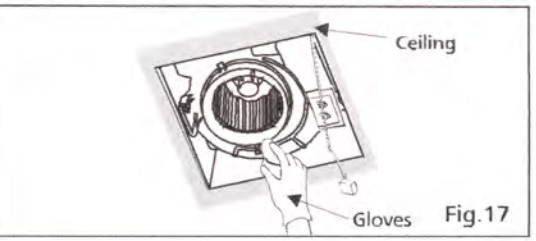

Fig.17

PDF created with pdfFactory Pro trial version www.pdffactory.com

PRACTICAL GUIDE TO INSTALLATION

Properly insulate the area around the fan to minimize building heat loss and gain. (Fig.18)
Loose fill or batt insulation can be placed directly over the fan housing in the attic. Panasonic fans and fan/light combination units do not create excessive heat that is a common problem with recessed light fixtures or some competitors' fan/light combinations. Our efficient, cool-running motors and our fluorescent lamp do not create enough ambient heat to be subjected to these limitations.

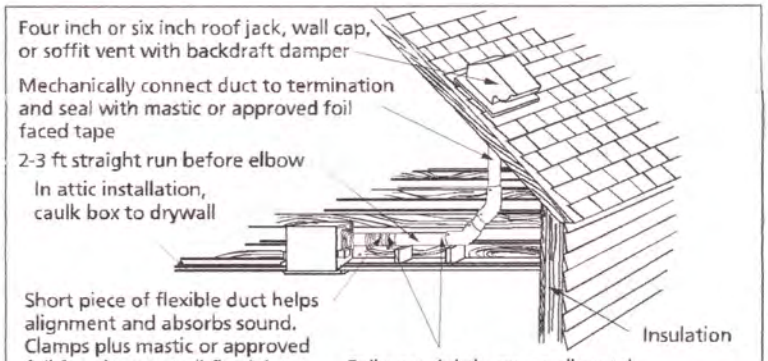

Fig.18

SPECIFICATIONS

■ Specifications

Model No.	Air direction	Voltage (V)	Frequency (Hz)	Duct diameter (inches)	Noise (sones)	Power consumption (W)	Speed (rpm)	Air volume at 0.1"WG (CFM)	Weight lb.(kg)
FV-13VKM3 FV-13VKS3 FV-13VK3	Exhaust	120	60	6	<0.3	12	657	130	10.6(4.8)
FV-08VKM3 FV-08VKS3 FV-08VK3	Exhaust	120	60	4	<0.3	7	816	80	10.2(4.6)
FV-05VK3	Exhaust	120	60	4	<0.3	4.5	754	50	10.2(4.6)

HVI Certified performance based on HVI Procedures 915,916,and 920.

■ Reference specifications

Model No.	Air direction	Voltage (V)	Frequency (Hz)	Duct diameter (inches)	Noise (sones)	Power consumption (W)	Speed (rpm)	Air volume at 0.1"WG (CFM)	Weight lb.(kg)
FV-13VKM3 FV-13VKS3	Exhaust	120	60	6	<0.3	9.1	635	110	10.6(4.8)
					<0.3	6.9	623	90	
					<0.3	5.5	625	70	
					<0.3	4.7	630	50	
					–	0.5 (*)	–	0	
FV-08VKM3 FV-08VKS3	Exhaust	120	60	4	<0.3	5.8	780	70	10.2(4.6)
					<0.3	5.1	762	60	
					<0.3	4.5	754	50	
					<0.3	4.2	755	40	
					<0.3	3.8	745	30	
					–	0.5 (*)	–	0	

Reference performance based on HVI Procedures 915, 916, and 920. [(*) Standby wattage.]

PRODUCT SERVICE

Warning Concerning Removal of Covers.
The unit should be serviced by qualified technicians only.
Your product is designed and manufactured to ensure a minimum of maintenance.
Should your unit require service or parts, call Panasonic Call Center at 1-866-292-7292 (USA) or 1-800-669-5165 (Canada).

Panasonic Corporation of North America
One Panasonic Way, Secaucus, New Jersey 07094
www.panasonic.com

Panasonic Canada Inc.
5770 Ambler Drive, Mississauga, Ontario L4W 2T3
www.panasonic.ca

T1011-1 08VKM3420A
Printed in China

PDF created with pdfFactory Pro trial version www.pdffactory.com